# TAC experienced/low Impact Raphaëlle

## 1 ORAGE À LYON S32 · 3/3L

*Corinne Hilpert: Gone Dancing Bk 2 · Crib: E-cribs · Diagram: Keith Rose's Diagrams*

**1--** 1c set advancing | turn BH ; dance down 2 places (2c+3c up) | turn BH to 3pl (2,3,1)
**9--** 3c+1c Tourbillon (2,1,3)
**17--** All chase clw ½ (to 3x,1x,2x) ; turn P RH ½, face P | cast R to exchanged places (3,1,2)
**25--** 1c+2c Poussette (3,1,2)

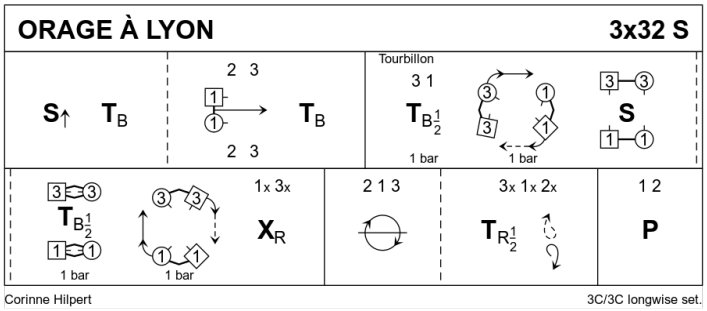


## 2 MERCI SOPHIE! M64 · 2/3L

*Anne Dejean: The Remission Book · Crib: E-cribs · Diagram: Keith Rose's Diagrams*

**1--** 1c+2c circle4 to L ; 1M & 2W chase ½ way clw
**9--** 1c+2c LHA ; 2M & 1W chase ½ way cclw (2x,1x)
**17--** 2c+1c RSh Reel4 on 1st diagonal, starting from & ending on opp sides (2x,1x)
**25--** 2c+1c set | petronella to centre line ; set facing P | turn P ¾ RH (2,1)

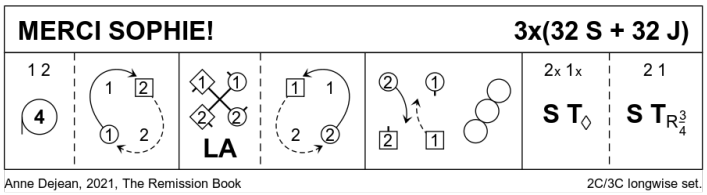


## 3 A NEW HOME J32 · 4/4L

*Isabel Monteiro · Crib: MiniCribs · Diagram: Keith Rose's Diagrams*

**1-8** 2L followed by 1L dance in front of 3L, RSh round 4L, behind 3L & up to 1st place **while** 3M followed by 4M dance similar, in front of 2M, round 1M & down to 4th place
**9-16** 3L followed by 4L & 2M followed by 1M repeat 1-8. 2 1 4 3
**17-24** 1s+4s (middle couples) Set & Rotate. 2 4 1 3
**25-32** Men make arches & Adv+Ret **while** Ladies dance under arches passing partner RSh & back to place; all turn partner RH

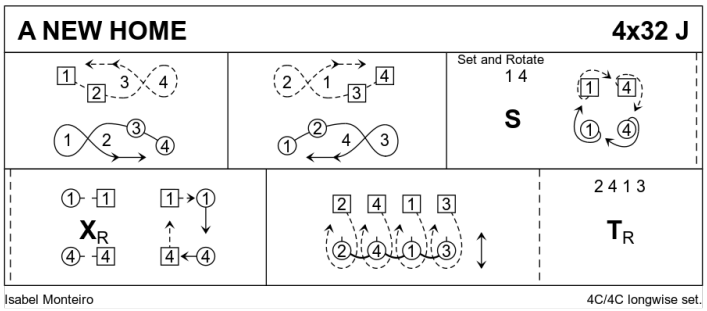

## 4 A TRIP TO APPLECROSS R32 · 2/3L

*Nicola Scott: RSCDS L 10 · Crib: E-cribs · Diagram: Keith Rose's Diagrams*

**1--** 1C set | 1M set twice **while{4}** 1W dance Rsh round P and back to place | 1c cross RH (1W face up) (1x,2)
**9--** M-chain up/dn
**17--** 1st half of Set&Rotate ; RHA
**25--** 2nd half of Set&Rotate (2,1x) ; 1c turn RH 1½ (or R elbow pivot turn) (2,1)

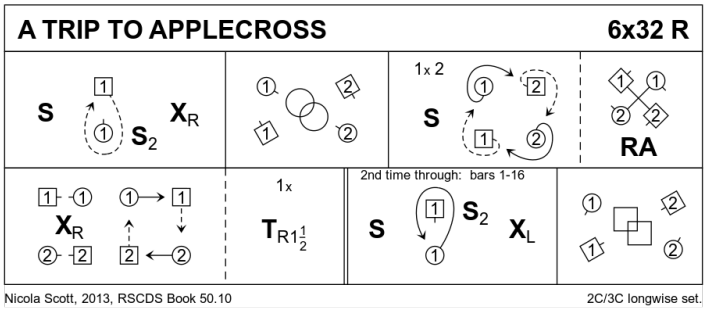


*Bar 1-16 2nd time through*

**1--** 1C set | 1W set twice **while{4}** 1M dance Lsh round P and back to place | 1c cross LH (1M face up) (1x,2)
**9--** L-chain up/dn

*On [3-6] alternative: Highland setting steps*

## 5 LE TRÈFLE À QUATRE FEUILLES J32 · 3/4L

*Anne Dejean: The Walnut Book Vol 2 · Crib: E-cribs · Diagram: Keith Rose's Diagrams*
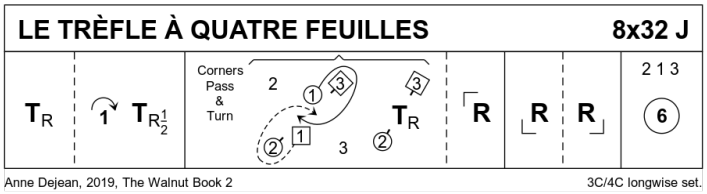
**1--** 1c turn RH ; cast off (2c up) | turn RH ½ to face 1cnrs
**9--** Corners Pass and Turn
**17--** Repeat [9-16] with 3cnrs then 4cnrs (2,1,3)
**25--** Circle6 and back